ANDANTEX S.r.l.

NetterVibration

15

Vacuum Fixing Devices for Vibrators
Series VAC

- Quick mounting without bolting or welding
- Strong connection due to high vacuum
- Can also be used on curved or uneven surfaces
- Optional air economizer
- ATEX conform and stainless steel versions available
- Customized versions possible

VAC 10 with NCT 4

VAC 15 with PKL 740 ST

VAC 30 with NTS 50/04

Serving industry with vibration

NetterVibration

ANDANTEX S.r.l.

Vacuum Fixing Devices for Vibrators

Series VAC

Type + Hose set	Air consumption without Vibration [l/min]		Weight [kg]	Minimum-Ø for round containers [mm]	Suitable vibratoren						
	4 bar	6 bar			NCB	NCR	NCT	NTK	NTS	NTP	PKL
VAC 6 + HG 6 N	6.5	10	0.53	400	-	-	1, 2	-	80-180 HF/NF	18	-
VAC 8 + HG 10 N	40	60	0.95	110	1, 2	-	1, 2	8 AL	120 HF, 120 NF* 180 HF, 180 NF*	25**	-
VAC 8 + HG 10 S	20	22	1.20								
VAC 10 + HG 10 N	40	60	1.05	110	1, 2, 3	3	3, 4	15 X, 16 18 AL	120 - 250 HF/NF*	25**	190**
VAC 10 + HG 10 S	20	22	1.30								
VAC 11 + HG 10 N	40	60	1.25	110	3, 5	10	5, 10	18 AL	180 HF, 180 NF 250 HF, 250 NF	-	190**, 450**
VAC 11 + HG 10 S	20	22	1.50								
VAC 12 + HG 15 N	60	122	2.85	350	10, 20	22	15, 29	25 AL	350 HF, 350 NF 100/01, 75/01**, 50/01**	25**, 32** 48**	450**, 740** 1000**
VAC 12 + HG 15 S	29	36	3.20								
VAC 13 + HG 15 N	110	170	4.20	850	10, 20	22	15, 29	-	75/01, 50/01, 70/02*	32**, 48*	740**, 1000 2100, 5000
VAC 13 + HG 15 S	41	52	4.55								
VAC 15 + HG 15 N	110	170	3.40	650	10, 20 50, 70	22 57*	15, 29 55, 108*	18 AL, 25	250 HF, 250 NF, 350 HF, 350 NF, 75/01, 50/01, 70/02*	32, 48*	740**
VAC 15 + HG 15 S	41	52	3.75								
VAC 20 + HG 15 N	110	170	7.25	850	-	57	55, 108	-	70/02, 54/02, 50/04*	32, 48	-
VAC 20 + HG 15 S	41	52	7.60								
VAC 30 + HG 30 N	110	170	11.50	1,500	-	120	126, 250	-	50/04, 50/08*	-	-
VAC 30 + HG 30 S	49	60	12.00								
VAC 40 + HG 40 N	220	340	20.00	1,500	-	-	-	-	50/08, 50/10*	-	-

The technical data are comparative values and can vary depending on the application. Additional data available upon request. Subject to technical changes. *Depending on application, please consult us. **Adapter plate necessary, please include order! For PKL, please order EE kit!

Type	Model	A [mm]	B [mm]	C [mm]	D [mm]	E [mm]	F [mm]
VAC 6	I	33.5	15	100	68	-	-
VAC 8	II	19	8	150	127	30	55
VAC 10	II	22	8	200	175	26,5	55
VAC 11	II	20	5.5	300	276	26	55
VAC 12	II	25	10	300	268	68	100

Type	Model	A [mm]	B [mm]	C [mm]	D [mm]	E [mm]	F [mm]
VAC 13	I	70	30	200	186	-	-
VAC 15	III	56	25	350	290	100	150
VAC 20	III	70	30	430	370	150	200
VAC 30	IV	70	30	396	337.5	426	370
VAC 40	V	70	30	430	370	375	425

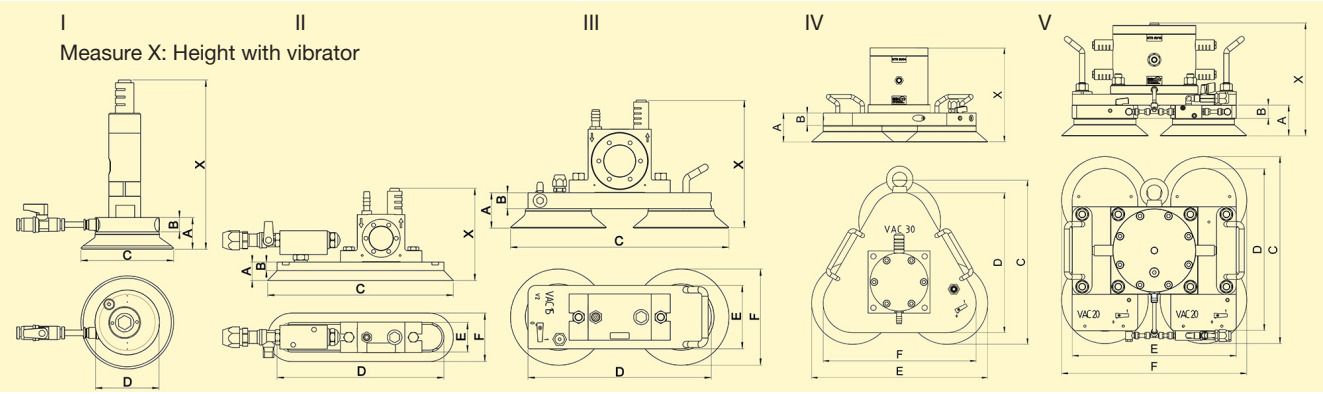

Application areas
The vacuum fixing devices VAC are designed for quick attachment of vibrators to smooth or, under certain circumstances, uneven and curved surfaces. The special feature of the vacuum fixing device is simple fastening without welding or screw connections. The brackets together with vibrators are used, for example, for emptying transport containers, plastic containers and for cleaning pipes.

Design and function
The appropriate vibrator is screwed onto the vacuum mount and both are supplied with compressed air by one of the optional Netter hose sets. As soon as compressed air is supplied to the VAC, the unit sucks firmly, thus ensuring a force-locked connection between the vibrator and the substrate.
The hose set with the air-saving circuit "S" holds the vibrator during its rest period at a reduced vacuum. Air consumption is thereby reduced by more than 30 percent. When starting the vibrator, the mount automatically generates full vacuum. ATEX-compliant brackets and appliances with a stainless steel plate are available.

Permissible operating conditions
Drive medium:
Compressed air or nitrogen (Filter ≤ 5 µm)
Operating pressure: 2 bar to 6 bar
Ambient temperature: -10 °C to 60 °C

***Netter**Vibration* offers the right accessories required for the mounting, installation and control of vibrators and interval impactors.

Netter provides solutions.
Consult our experienced application technicians.

Andantex Srl
Via A. Ponchielli, 6
20063 - Cernusco Sul Naviglio (MI)
Tel.: 02-9217091
Fax: 02-92100455
sales@andantex.it
www.andantex.it

Netter GmbH
Fritz-Lenges-Str. 3
55252 Mainz-Kastel

www.**Netter**Vibration.com
info@**Netter**Vibration.com

08/2021 Subject to change